Components for the **Kitchen** & **Furniture** Trade

MVI HAZEL

SINKS, TAPS & ACCESSORIES

Catalogue 2016

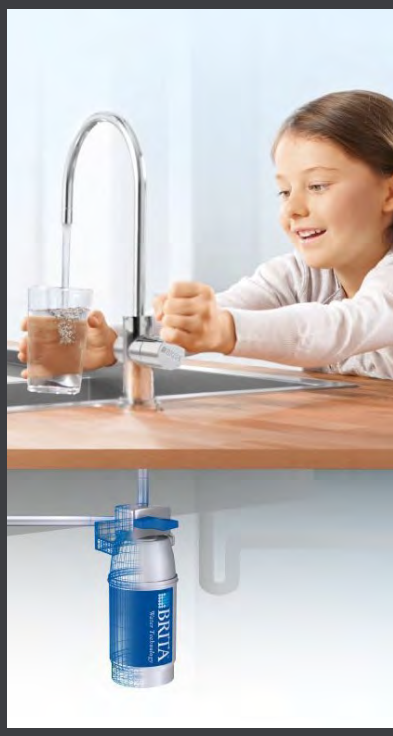

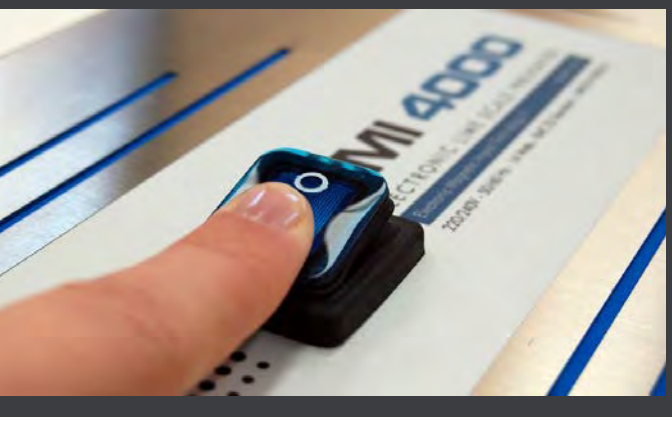

PYRAMIS BRITA Quooker dropsoN

Components for the **Kitchen** & **Furniture** Trade

MVI HAZEL Ltd
1 Mygan Industrial Park
Jamestown Road, Finglas
Dublin 11, Ireland

CONTACT & HOW TO ORDER

Our objective is to make it as easy as possible for our customers to do business with us and we offer lots of different ways to place your order.

Ireland: **+353 1 864 3480**
UK: **+44 1772 218 080**

You can contact our sales office directly by calling the phone number between:
Monday - Thursday: 8am - 5pm
Friday: 8am - 4pm

+353 1 864 3508

You can send your order through at any time by fax.

sales@mvihazel.com

We also take orders by email.

B2B WEBSHOP

It is very easy and convenient to order using our new **B2B Webshop**.
For more details please visit **www.mvihazel.com** or call us on:

Ireland: **+353 1 864 3480**
UK: **+44 1772 218 080**

CONTENTS

TAPS 3

DESCALING SYSTEMS 13

SINKS 15

SINK DIMENSIONS 23

MVI HAZEL

Components for the **Kitchen** & **Furniture** Trade

INSTANT 100°C WATER

Now in stock

*for more details contact your local representative or the sales office

Quooker®
THE BOILING-WATER TAP

TAPS

FESTIVO PULL OUT TAP

PYRAMIS

- Pull out spray head
- Single flow outlet
- Only operates at high pressure
- 2 meter extension hose
- Perfect for kitchens with undermount sinks and utility rooms
- Cut-out: 35mm
- Height: 180mm
- Reach: 260mm

Code	Description
2600550	Pyramis Festivo pull out tap

COMPOSITE BLACK TOP LEVER TAP

PYRAMIS

- Single flow mixer tap
- Beautiful smooth granite finish to match black composite sink
- Non return valve
- Long reach spout
- Cut-out: 35mm
- Height: 160mm
- Reach 200mm
- Mixer taps reduce water flow without affecting pressure, saving water

Code	Description
2710550	Pyramis black composite top lever tap

COMPOSITE SANDSTONE TOP LEVER TAP

PYRAMIS

- Single flow mixer tap to match the sandstone composite sink
- Smooth sandstone finish to match sandstone composite sink
- Non return valve
- Long reach spout
- Cut-out: 35mm
- Height: 160mm
- Reach: 200mm
- Mixer taps reduce water flow without affecting pressure, saving water

Code	Description
2710560	Pyramis sandstone composite top lever tap

KELDA FILTER TAP WITH CERAMIC HANDLES

BRITA

- 3-way water filter dispenser
- Water filter built in to a traditional tap
- Clean Brita water available on tap
- Separate lever for Brita filtered water in center
- Two separate outlets for filtered and hot/cold water
- Cartridge stored under sink
- Complete starter kit with all the installation components
- Beautiful brushed swan neck design with ceramic handles
- Popular to match with ceramic sinks
- Tap height: 360mm
- Tap reach: 200mm

Code	Description
2710940	Brita Kelda triflow tap with ceramic handles

DOLCE FILTER TRIFLOW TAP KIT

BRITA

- 3-way water filter dispenser
- Fresh BRITA optimised water available immediately
- Separate lever for BRITA filtered water
- Two separate outlets for filtered and hot/cold water
- Tap height: 280mm
- Tap reach: 280mm
- Complete starter kit with all the components required for installation
- Simple and space-saving installation of the replacement cartridge under the sink

Code	Description
2710950	Brita filter triflow tap kit

COLORADO MODERN SIDE LEVER TAP

- Modern stylish mixer tap will add a touch of class to any kitchen/bathroom
- Ultra modern styling
- Modern chrome mixer tap
- Stylish chrome finished side mixing lever
- Ceramic disc valve
- Cut-out: 35mm
- Height: 360mm
- Reach: 265mm

Code	Description
2720020	Colorado modern side lever tap

UTAH MODERN STYLE TAP

- Dual flow contemporary mixer kitchen tap
- Durable and quality chrome plated with brass body
- Long 1/4 turn valves
- Cut-out: 35mm
- Height: 393mm
- Reach: 243mm
- 5 year warranty
- Made in Italy

Code	Description
2720025	Utah modern style tap

IDAHO SWAN NECK TAP

- Modern square design
- Quality brass body and chrome plated tap
- Not die cast
- ¼ turn valves
- Hot cold markings
- Full rotation
- Cut-out: 35mm
- Height: 330mm
- Reach: 220mm
- 5 year warranty
- Made in Italy

Code	Description
2720028	Idaho Swan Neck Tap

DETROIT STAR ¼ TURN TAP

- Valve type: compression valve
- Operation: conventional
- Colour: chrome
- Cut-out: 35mm
- Height: 320mm
- Reach: 235mm

Code	Description
2720030	Detroit star ¼ turn tap

ALTO TOP LEVER TAP

- Single flow mixer tap
- Non return valve
- Long reach spout
- Copper pipping for better water pressure
- Cut-out: 35mm
- Standard .3 to .5 bar range
- 5 year warranty
- Made in Italy

Code	Description
2720032	Alto top lever tap

CHICAGO TOP LEVER TAP

- Durable brass bodied top lever tap
- Brushed finish
- Non return valve
- Long reach spout
- Copper pipping for better water pressure
- Cut-out: 35mm
- Standard .3 to .5 bar range
- 5 year warranty
- Made in Italy

Code	Description
2720034	Chicago Top Lever Tap

SANTA FE TAP

- Cross head monoblock sink mixer kitchen tap
- Ceramic cartridge
- ¼ turn valves
- Cut out: 35mm
- 5 year warranty
- Made in Italy

Code	Description
2720035	Santa Fe tap

MIAMI ¼ TURN TAP

- Double lever monoblock single flow mixer tap
- Allows you to reduce water flow without affecting the pressure
- Saves water
- Non return valve
- Cut-out: 35mm
- Height: 320mm
- Reach: 180mm
- 5 year warranty
- Made in Italy

Code	Description
2720040	Miami ¼ turn tap

KANSAS OLD STYLE CHROME TAP

- Chrome finish
- Bright chrome style that suits a traditional kitchen
- Popular choice of tap for ceramic sinks
- Height: 230mm
- Reach: 300mm
- 5 year warranty
- Made in Italy

Code	Description
2720042	Kansas old style chrome tap

KANSAS OLD STYLE BRUSHED STEEL TAP

- Traditional mono sink mixer tap
- Cut-out: 35mm
- Finish: brushed steel
- Height: 230mm
- Reach: 300mm
- 5 year warranty
- Made in Italy
- Modern technology and true period kitchen styling gives the traditional tap a timeless elegance

Code	Description
2720043	Kansas old style brushed steel tap

KANSAS OLD STYLE BRONZE TAP

- Bronze finish
- Suitable for traditional kitchens
- Height: 230mm
- Reach: 300mm
- 5 year warranty
- Made in Italy

Code	Description
2720044	Kansas old style bronze tap

TEXAS SINGLE SIDE LEVER TAP

- Single lever mixer tap
- Reduces water flow without affecting pressure, saves water
- Non return valve
- Swan neck
- Ceramic disc valve
- Cut-out: 35mm
- Height: 300mm
- Reach: 230mm

Code	Description
2720045	Texas single side lever tap

NEVADA TOP LEVER TAP

- Top lever mixer tap
- Reduces water flow without affecting pressure
- Saves water
- Non return valve
- Cut-out: 35mm
- Height: 200mm
- Reach: 300mm

Code	Description
2720047	Nevada top lever tap

NEW YORK ¼ TURN TAP

- Double lever monoblock kitchen mixer tap
- Reduces the water flow without affecting the pressure
- Saves water
- ¼ turn valves
- Dual flow spout
- Cut-out: 35mm
- Height: 160mm
- Reach: 200mm
- 5 year warranty
- Made in Italy

Code	Description
2720055	New York ¼ turn tap

COLUMBIA TAP WITH CERAMIC HANDLES

- Monobloc sink mixer tap
- Chrome plated with a choice of ceramic or matching handles
- Tap reduces water flow without affecting pressure, saving water
- Dual flow spout
- Artisan signature font to mark hot and cold
- Popular to match with ceramic and Belfast sinks
- Ceramic cartridge
- ¼ turn valves
- Cut-out: 35mm
- Height: 360mm
- Reach: 220mm
- 5 year warranty
- Made in Italy

Code	Description
2720060	Columbia tap with ceramic handles

COLUMBIA TAP WITH CHROME HANDLES

- Chrome plated with matching handles
- Dual flow spout
- Artisan signature font to mark hot and cold
- Traditional design with modern finish
- ¼ turn valves
- Cut-out: 35mm
- Height: 360mm
- Reach: 220mm
- 5 year warranty
- Made in Italy

Code	Description
2720062	Columbia tap with chrome handles

BRIDGE TAP WITH MATCHING HANDLES

- Beautiful traditional chrome Bridge tap
- Double handle turn
- Copper piping for better water pressure
- To complete the farmhouse kitchen look
- Popular match with Belfast and Butler sinks
- Elegant option for two holed sinks
- Not suitable for single holed sinks
- Swivel spout for use on single and multiple bowls
- Artisan signature font to mark hot and cold
- Height: 240mm
- Reach: 230mm
- 5 year warranty
- Made in Italy

Code	Description
2720063	Bridge tap with matching handles

DECKMIXER TAP

- Cross head deckmixer tap
- For 2 hole sinks
- Ceramic cartridge
- Height: 180mm
- Reach: 240mm
- 5 year warranty
- Made in Italy
- Two holed tap for the following kitchen sinks:
  - Single bowl double drainer
  - Double bowl single drainer

Code	Description
2720065	Deckmixer tap

ROCOCO CHROME TAP

- Cross head monoblock sink mixer
- ¼ turn valves
- Cut out: 35mm
- Available in chrome
- Far reaching spout extends 200mm to center of sink from base
- Height: 365mm
- Reach: 207mm

Code	Description
2720070	Rococo chrome tap

ROCOCO BRUSHED CHROME TAP

- Cross head monoblock sink mixer
- ¼ turn valves
- Cut out: 35mm
- Available in brushed chrome
- Height: 365mm
- Reach: 207mm

Code	Description
2720075	Rococo brushed chrome tap

TUTTI BRUSHED CHROME TAP

- Cross head monoblock sink mixer
- ¼ turn valves
- Cut out: 35mm
- Available in brushed chrome
- Height: 375mm
- Reach: 207mm

Code	Description
2720085	Tutti brushed chrome tap

TUTTI CHROME TAP

- Cross head monoblock sink mixer
- ¼ turn valves
- Cut out: 35mm
- Available in chrome
- Height: 375mm
- Reach: 207mm

Code	Description
2720080	Tutti chrome tap

CHERIKA SQUARE CHROME TAP

- Sleek square design
- Finish: polished chrome
- ¼ turn valves
- Cut out: 35mm
- Equipped with solid plumbing fittings
- Height: 376mm
- Reach: 197mm

Code	Description
2720087	Cherika square chrome tap

CHERIKA SQUARE BRUSHED NICKEL TAP

- Sleek square design
- Finish: brushed nickel
- ¼ turn valves
- Cut out: 35mm
- Innovative and modern style spout and turn handles
- Height: 376mm
- Reach: 197mm

Code	Description
2720089	Cherika Square Brushed Nickel Tap

INNOKO PULL OUT SPRAY HEAD TAP

- Pull down spray head tap with solid frame
- Material: 100% stainless steel
- Side lever 45 degree valve for regular tap function
- Push control for spray
- Cut-out: 35mm
- Height: 700mm
- Reach: 260mm
- Spray head diameter: 55mm
- A perfect combination of practicality and stunning modern design
- Tap that allows you to rinse down your sink and function as a regular tap due to solid stainless steel support stand

Code	Description
2720094	Innoko Pull Out Spray Head Tap

BASIC CHROME TAP

Quooker

- Dedicated instant boiling water tap
- 100 degree angle spout
- Enjoy instant boiled hot food and drink
- No need to put on kettle
- Will transform everyday life of your kitchen
- Great addition to any home, restaurant or workplace kitchen
- Comes with 3 litre Pro3-VAQ tank
- Finish: chrome

Code	Description
2720502	Quooker Basic chrome tap

BASIC BRUSHED CHROME TAP

Quooker

- Dedicated instant boiled water
- From Europe's best boiling water tap brand Quooker
- 100 degree angle spout
- Enjoy instantly boiled tea, coffee, noodles and eggs
- Will transform everyday life of your kitchen
- Excellent addition to cooking station or workplace
- Comes with 3 litre Pro3-VAQ tank
- Finish: brushed chrome

Code	Description
2720512	Quooker Basic brushed chrome tap

FUSION ROUND CHROME TAP

Quooker

- Instant boiling water kitchen tap
- Single spout providing cold, hot and instant boiled water
- Childproof double push and turn valve to release boiled water
- Red light sensor to denote boiling water tap is active
- Enjoy instant tea, coffee, boiled eggs, noodles and soup
- Great addition to any home, restaurant or workplace kitchen
- Available with either a COMBI or 3 litre Pro3-VAQ tank
- Sleek swan neck tap
- Finish: chrome

Code	Description
2720542	Quooker Fusion round chrome tap
2720590	Quooker Fusion round chrome tap Combi tank

FUSION ROUND BRUSHED CHROME TAP

Quooker

- Instant boiled water tap
- Childproof double push and turn valve to release boiled water
- Red light sensor to denote boiling water tap is active
- Side lever for fresh water
- Instant change in temperature when switching between levers
- Enjoy instant cups of tea/coffee, noodles and boiled veg
- Greatly increase efficiency in kitchen restaurant
- Comes with 3 litre Pro3-VAQ tank
- Sleek swan neck tap
- Finish: brushed chrome

Code	Description
2720552	Quooker Fusion round brushed chrome tap

FUSION SQUARE CHROME TAP

Quooker

- Instant boiling water and hot/cold kitchen tap
- Single spout mixer tap in Nordic design with duo levers
- Childproof double push and turn valve to release boiled water
- Red light sensor to denote boiling water tap is active
- For instant boiled eggs, noodles and hot drinks
- Great addition to any kitchen restaurant or canteen
- Available with either a COMBI or 3 litre Pro3-VAQ tank
- Square nordic theme in Fusion design
- Finish: chrome

Code	Description
2720572	Quooker Fusion square chrome tap
2720592	Quooker Fusion square chrome tap Combi tank

FUSION SQUARE BRUSHED CHROME TAP

Quooker

- Instant boiling water square Quooker fusion tap
- Childproof double push and turn valve to release boiled water
- Red light sensor to denote boiling water tap is active
- Instant boiled food and drink while still having conventional tap
- Great addition to any home, restaurant or workplace kitchens
- Comes with 3 litre Pro3-VAQ tank
- Square modern design with Fusion tank
- Price on application
- Finish: brushed chrome

Code	Description
2720582	Quooker Fusion square brushed chrome tap

dropsoN

The new way of treating water

DESCALING SYSTEMS

LIMESCALE WATER FILTER EMI2500 dropsoN

- Prevents limescale buildup throughout your plumbing system
- Preserves all plumbing appliances
- Saves money on water heating bills
- Does not require salt
- Requires no maintenance
- No backwash approx 90L of water
- 5 year warranty on all parts
- Uses same amount of energy as an 40W energy saving light bulb
- Unlike other water filtration systems, it does not pass salt into your system

Code	Description
2720650	Dropson Tap EMI2500 Unit + Filter

LIMESCALE WATER FILTER EMI4000 dropsoN

- Prevents limescale buildup throughout your plumbing system
- Preserves all plumbing appliances
- Saves money on water heating bills
- Does not require salt
- Requires no maintenance
- No backwash approx 90L of water
- 5 year warranty on all parts
- Uses same amount of energy as an 40W energy saving light bulb
- Unlike other water filtration systems, it does not pass salt into your system

Code	Description
2720652	Dropson EMI4000 Unit + Filter

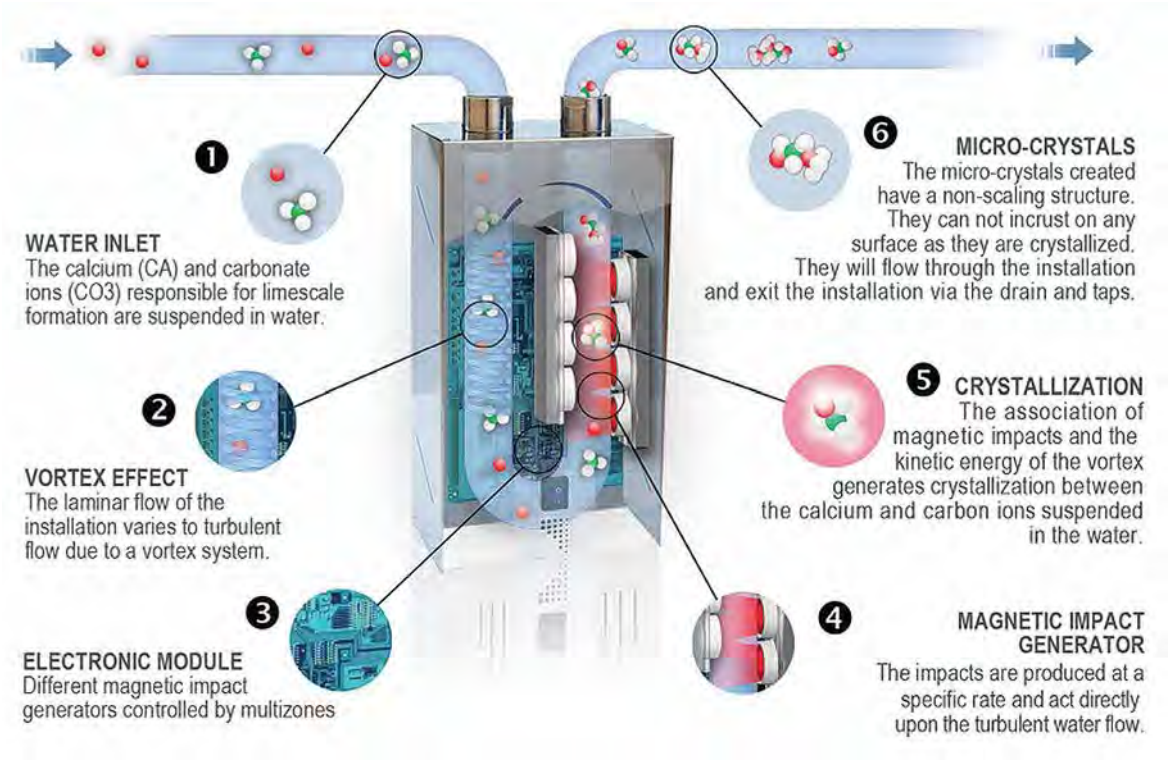

PYRAMIS

SINKS

ALAZIA COMPOSITE BLACK SINGLE BOWL SINK

PYRAMIS

- Beautiful granite sink composition
- Heavy duty and scratch resistant
- Dimensions:
  - Outer: 860 x 500mm
  - Bowl depth 200mm
  - Minimum base unit: 450mm
- Reversible tap hole punched out from beneath sink
- 10 year warranty on all composite sinks

Code	Description
2710500	Pyramis Alazia composite black single bowl sink

PYRAMIS ALAZIA COMPOSITE WHITE SINGLE BOWL SINK

PYRAMIS

- Pyramis made smooth white finish composite sink
- Dimensions:
  - Outer dimensions: 860 x 500mm
  - Minimum base unit: 450mm
  - Bowl depth: 200mm
- Hardened surface and scratch resistant
- Reversible
- 10 year warranty on all composite sinks

Code	Description
2710503	Pyramis Composite Single Bowl Sink White

ALAZIA COMPOSITE SANDSTONE SINGLE BOWL SINK

PYRAMIS

- Pyramis made smooth sandstone finish composite sink
- Finish: cream
- Dimensions:
  - Outer dimensions: 860 x 500mm
  - Minimum base unit: 450mm
  - Bowl depth: 200mm
- Sandstone surface and scratch resistant
- Reversible
- 10 year warranty on all composite sinks

Code	Description
2710505	Pyramis Alazia composite sandstone single bowl sink

ALAZIA COMPOSITE BLACK 1½ BOWL SINK

PYRAMIS

- Dimensions:
  - Outer: 1000 x 500mm
  - Minimum base unit: 600mm
  - Bowl depth 200mm
- Smooth granite sinks
- Heavy frame and scratch resistant
- Available finish: black
- Reversible
- 10 year warranty on all composite sinks

Code	Description
2710510	Pyramis Alazia composite black 1.5 bowl sink

ALAZIA COMPOSITE WHITE 1½ BOWL SINK

PYRAMIS

- Dimensions:
  - Outer: 1000 x 500mm
  - Minimum base unit: 600mm
- Available finish: white
- Reversible
- 10 year warranty on all composite sinks

Code	Description
2710513	Pyramis Composite Bowl And Half Sink White

ALAZIA COMPOSITE SANDSTONE 1½ BOWL SINK

PYRAMIS

- Dimensions:
  - Outer: 1000 x 500mm
  - Minimum base unit: 600mm
- Available finish: sandstone
- Reversible
- 10 year warranty on all composite sinks

Code	Description
2710515	Pyramis Alazia composite sandstone 1.5 bowl sink

WHITE CERAMIC BELFAST SINK

- Material: white ceramic Belfast sinks
- Manual chrome valve included
- Weir overflow and waste kit included
- High quality will not crack after time or smash dishes
- Weight: 50kg
- Finish: white
- Dimensions: 595 x 455 x 260mm
- Also available in 800mm double bowl
- 10 year manufacturer warranty
- Note: requires sturdy unit for high quality sink

Code	Description
2710610	White ceramic Belfast sink

WHITE CERAMIC DOUBLE BOWL BELFAST SINK

- Material: fine fireclay double bowl Belfast sink
- Two manual chrome valves McAlpine fitting standard
- Finish: white ceramic
- Semi bored 35mm hole centre for kitchen tap on underside
- Minimum base unit 800mm
- Dimensions:
  - Outer: 800 x 500 x 220mm
  - Bowl (2x): 365 x 440 x 180mm
- 10 year manufacturer warranty on all ceramic sinks

Code	Description
2710620	Belfast white ceramic double sink

WHITE CERAMIC BUTLER SINK

- White ceramic Yorkshire themed traditional Butler sink
- Elegant front panel to suit shaker kitchens
- Perfect blend of traditional theme and chic design
- Reversible
- Solid 30mm thick frame
- Manual chrome valve McAlpine fitting standard
- Waste included for 90mm hole
- 20mm x 40mm square overflow
- Minimum base unit 800mm
- Dimensions:
  - Outer: 755 x 455 x 255mm
  - Inner: 695 x 395 x 225mm
- 10 year warranty on all ceramic sinks

Code	Description
2710625	White ceramic Butler sink

CONTRACT SINGLE BOWL SINK

PYRAMIS

- Reversible stainless steel kitchen sink
- Best value in range
- Dimensions:
  - Outer: 940 x 490mm
  - Bowl: 400 x 340 x 150mm
  - Minimum base unit: 450mm
- Finish: stainless steel
- 10 year Pyramis manufacturer warranty

Code	Description
2600000	Pyramis Contract single bowl stainless steel sink

VERA SINGLE BOWL SINK & TAP PACK

PYRAMIS

- Complete assembled pack
- Contains kitchen sink and top lever tap
- Top lever tap in brushed steel finish with 35mm centre
- Dimensions:
  - Outer: 860 x 500mm
  - Bowl: 300 x 130mm
- Finish: stainless steel
- Reversible
- Waste kits included

Code	Description
2600002	Pyramis Vera single bowl sink and tap pack

VERA 1½ BOWL SINK & TAP PACK

PYRAMIS

- Complete assembled pack
- Contains kitchen sink and top lever tap
- Top lever tap in brushed steel finish with 35mm centre
- Dimensions:
  - Outer: 1000 x 500mm
  - Bowl: 320 x 120mm
  - Half bowl: 150 x 100mm
- Finish: stainless steel
- Reversible
- Waste kits included

Code	Description
2600004	Pyramis Vera bowl and half sink and tap pack

SPARTA COMPACT SINGLE BOWL SINK

PYRAMIS

- Dimensions:
  - Outer: 620 x 500mm
  - Bowl: 340 x 400 x 150mm
  - Minimum base unit: 450mm
- Waste kit included
- 10 year Pyramis manufacturer warranty
- Compact design: ideal kitchen sink for apartments, flats, cooking stations and mobile homes

Code	Description
2600008	Pyramis Sparta compact single bowl stainless steel sink

ATHENA SINGLE BOWL SINK

PYRAMIS

- Dimensions:
  - Outer: 860 x 500mm
  - Bowl: 340 x 400 x 150mm
  - Minimum base unit: 450mm
- Finish: stainless steel
- Modern precision panel design
- Reversible
- 10 year Pyramis manufacturer warranty

Code	Description
2600018	Athena stainless steel sink single bowl

ATHENA 1½ BOWL SINK

PYRAMIS

- Bowl and half kitchen sink
- Dimensions:
  - Outer: 1000 x 500mm
  - Bowl: 340 x 400mm / 170 x 275mm
  - Minimum base unit: 500mm
- Finish: stainless steel
- Reversible
- Bevel precision edge to ensure flush fitting
- Quality 3mm stainless steel finish
- Durable but yet highly aesthetic
- 10 year Pyramis manufacturer warranty

Code	Description
2600022	Pyramis Athena bowl & ½ stainless steel sink

GALAXY SINGLE BOWL SINK

PYRAMIS

- Dimensions:
  - Outer dimensions: 960 x 480mm
  - Bowl dimensions: 400 x 400 x 200mm
  - Minimum base unit: 500mm
- Finish: stainless steel
- Reversible
- 10 year Pyramis manufacturer warranty

Code	Description
2600025	Pyramis Galaxy stainless steel sink single bowl

GALAXY 1½ BOWL SINK

PYRAMIS

- Dimensions:
  - Outer: 960 x 480mm
  - Bowl: 340 x 400 x 150mm / 165 x 290 x 120mm
  - Minimum base unit: 600mm
- Finish: stainless steel
- Reversible
- Stylish satin coating to ensure smooth and stainless surface
- Bowl welded to frame rather than simple press production
- Laser edge technology to ensure seamless fitting with worktop
- 10 year Pyramis manufacturer warranty

Code	Description
2600030	Pyramis Galaxy bowl & ½ stainless steel sink

TWO TAP HOLE SINGLE BOWL SINK

PYRAMIS

- Suited to instance where a deckmixer tap is already acquired
- Non-reversible
- Dimensions:
  - Outer: 940 x 490mm
  - Bowl: 400 x 340 x 150mm
  - Minimum base unit: 450mm
- Finish: stainless steel
- 10 year Pyramis manufacturer warranty

Code	Description
2600040	Pyramis single bowl stainless steel sink 2 tap hole RH
2600045	Pyramis single bowl stainless steel sink 2 tap hole LH

ROUND BOWL SINK

PYRAMIS

- Round kitchen sink
- Dimensions:
  - Outer: 450mm
  - Bowl: 385 x 150mm
  - Minimum base unit: 450mm
- Finish: stainless steel
- Standalone design to suit modern minimalist look
- Also popular for utility rooms
- 10 year Pyramis manufacturer warranty

Code	Description
2600050	Pyramis round bowl stainless steel sink

ROUND BOWL SINK WITH TAP HOLE

PYRAMIS

- Round bowl sink with tap hole
- Dimensions:
  - Outer: 485mm
  - Bowl: 385 x 163mm
  - Minimum base unit: 450mm
- Finish: stainless steel
- 10 year Pyramis manufacturer warranty
- Same product as round bowl sink but no separate installation for tap required

Code	Description
2600055	Pyramis round bowl stainless steel sink with tap hole

ROUND BOWL ROUND DRAINER SINK

PYRAMIS

- Dimensions:
  - Outer: 850 x 450mm
  - Bowl: 360 x 150mm
  - Compact fitting minimum base unit of 400mm required
- Finish: stainless steel
- Reversible
- Modern innovative design with patented trend patterns
- 10 year Pyramis manufacturer warranty
- High 3mm lip and trends within draining board ensure easy flow of water to bowl

Code	Description
2600060	Pyramis round bowl round drainer stainless steel sink

ROYAL MINI ROUND SINK

PYRAMIS

- Mini round sink for:
  - Kids schools and crèches
  - Restaurant toilets/kitchen washrooms
  - Water stations in offices and hospitals
  - Utility rooms
- Dimensions:
  - Diameter: 450mm
  - Bowl: Curves to 140mm
  - Height: 160mm
  - Minimum base unit: 450mm
- Finish: stainless steel
- 10 year Pyramis manufacturer warranty

Code	Description
2600070	Pyramis Royal mini round sink

IRIS SMALL UNDERMOUNT SINK

PYRAMIS

- Dimensions:
  - Outer: 304 x 180mm
  - Bowl: 288 x 165 x 120mm
  - Minimum base unit: 300mm
- Finish: stainless steel
- Small undermount option
- 10 year Pyramis manufacturer warranty

Code	Description
2600090	Pyramis Iris small round undermount stainless steel sink

IRIS MEDIUM UNDERMOUNT SINK

PYRAMIS

- Medium sized undermount sink
- Dimensions:
  - Outer: 423 x 423mm
  - Bowl: 400 x 400 x 200mm
  - Minimum base unit: 450mm
- Finish: stainless steel
- 10 year Pyramis manfacturer warranty

Code	Description
2600100	Pyramis Iris medium round undermount stainless steel sink

IRIS LARGE UNDERMOUNT SINK

PYRAMIS

- Dimensions:
  - Outer: 523 x 424mm
  - Bowl: 500 x 400 x 200mm
  - Minimum base unit: 600mm
- Finish: stainless steel
- Large undermount option
- 10 year Pyramis manufacturer warranty

Code	Description
2600105	Pyramis Iris large round undermount stainless steel sink

DIONE 1.5 BOWL UNDERMOUNT SINK

PYRAMIS

- 1.5 undermount sinks
- Dimensions:
  - Outer: 590 x 450mm
  - Bowl: 340 x 400 x 180mm
  - Half bowl: 120 x 240 x 120mm
- Finish: stainless steel
- Radial cut-out for granite worktops
- Reversible
- 10 year Pyramis manufacturer warranty

Code	Description
2600110	Pyramis Dione stainless steel undermount 1.5 bowl sink

LYDIA SMALL UNDERMOUNT SINK

PYRAMIS

- Dimensions:
  - Outer: 210 x 440mm
  - Bowl: 170 x 400 x 140mm
  - Minimum base unit: 300mm
- Finish: stainless steel
- Feature: rounded edges
- 10 year Pyramis manufacturer warranty
- Used in conjunction with the medium or large bowl undermount sinks to give the option of a bowl and half undermount sink

Code	Description
2600200	Pyramis Lydia small square undermount stainless steel sink

LYDIA MEDIUM UNDERMOUNT SINK

PYRAMIS

- Square undermount design with rounded internal edges
- Dimensions:
  - Outer: 440 x 440mm
  - Bowl: 400 x 400 x 200mm
  - Minimum base unit: 450mm
- Finish: stainless steel
- 10 year Pyramis manufacturer warranty

Code	Description
2600205	Pyramis Lydia medium square undermount stainless steel sink

SINK DIMENSIONS

ALAZIA COMPOSITE BLACK SINGLE BOWL SINK

PYRAMIS

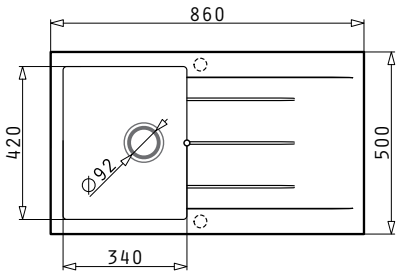

ALAZIA COMPOSITE BLACK 1½ BOWL SINK

PYRAMIS

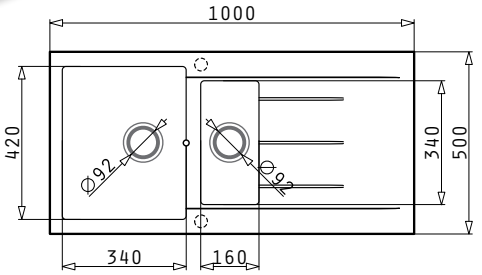

PYRAMIS ALAZIA COMPOSITE WHITE SINGLE BOWL SINK

PYRAMIS

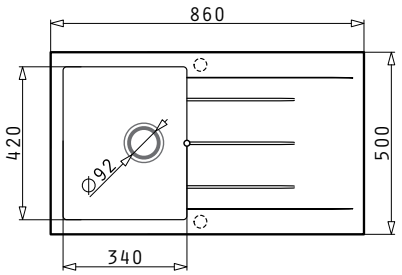

PYRAMIS ALAZIA COMPOSITE WHITE 1½ BOWL SINK

PYRAMIS

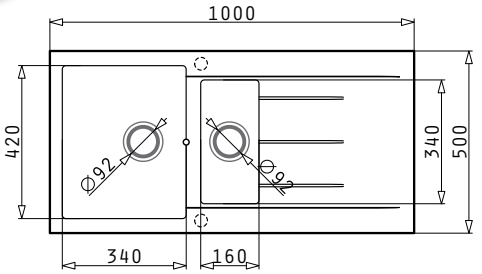

ALAZIA COMPOSITE SANDSTONE SINGLE BOWL SINK

PYRAMIS

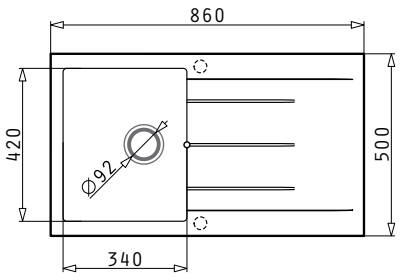

ALAZIA COMPOSITE SANDSTONE 1½ BOWL SINK

PYRAMIS

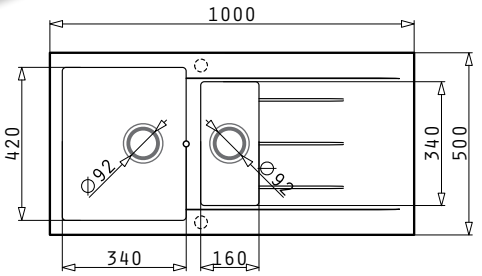

WHITE CERAMIC BELFAST SINK

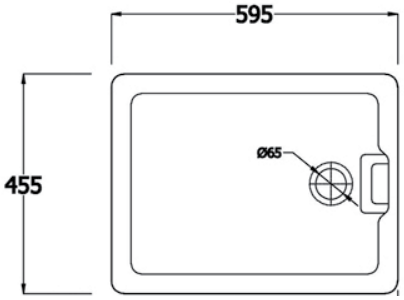

CONTRACT SINGLE BOWL SINK

PYRAMIS

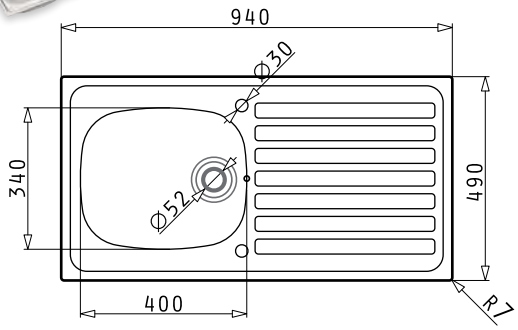

WHITE CERAMIC DOUBLE BOWL BELFAST SINK

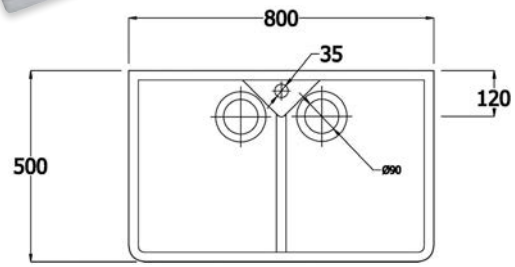

VERA SINGLE BOWL SINK & TAP PACK

PYRAMIS

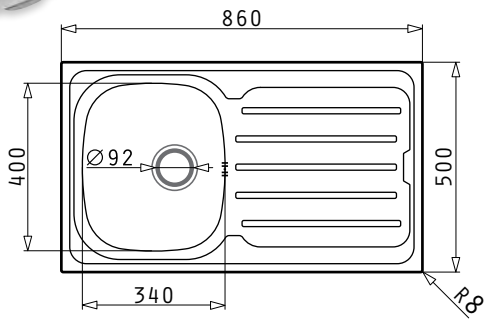

WHITE CERAMIC BUTLER SINK

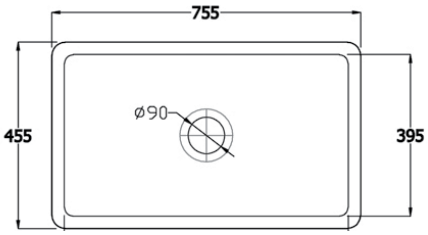

VERA 1½ BOWL SINK & TAP PACK

PYRAMIS

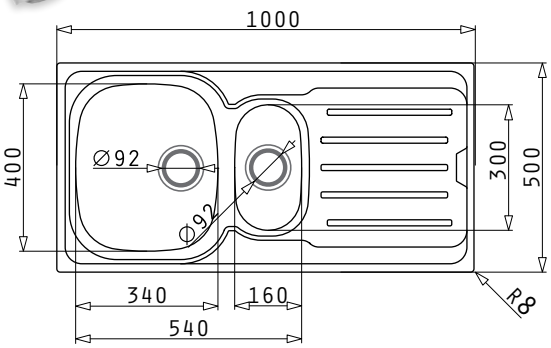

SPARTA COMPACT SINGLE BOWL SINK

PYRAMIS

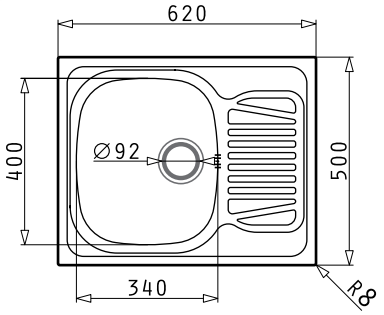

GALAXY SINGLE BOWL SINK

PYRAMIS

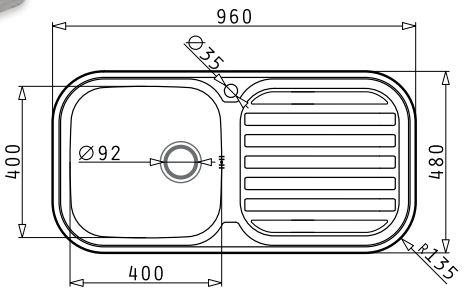

ATHENA SINGLE BOWL SINK

PYRAMIS

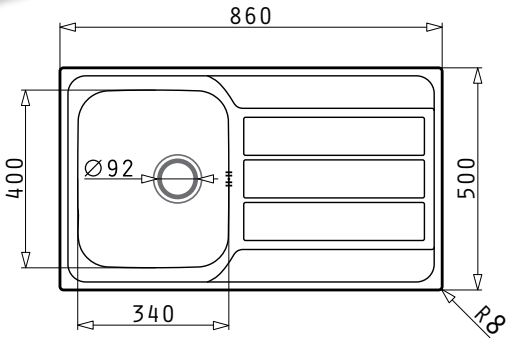

GALAXY 1½ BOWL SINK

PYRAMIS

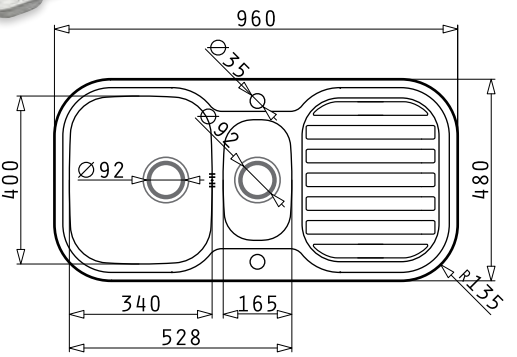

ATHENA 1½ BOWL SINK

PYRAMIS

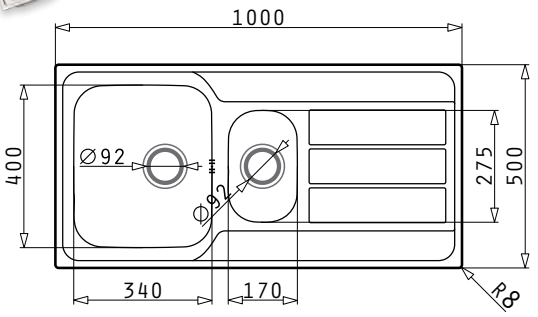

TWO TAP HOLE SINGLE BOWL SINK

PYRAMIS

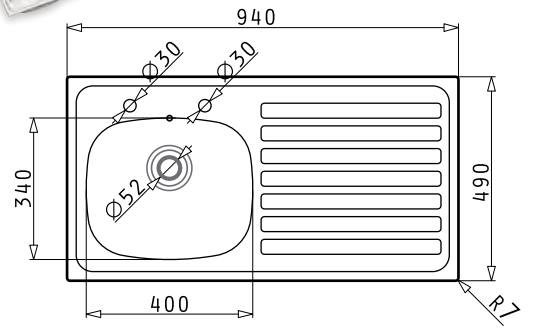

ROUND BOWL SINK

PYRAMIS

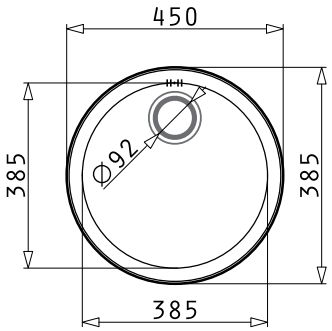

ROYAL MINI ROUND SINK

PYRAMIS

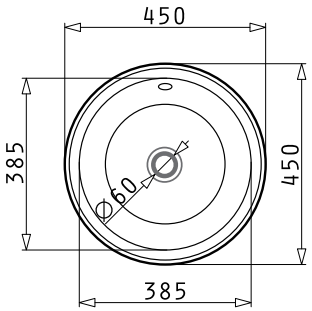

ROUND BOWL SINK WITH TAP HOLE

PYRAMIS

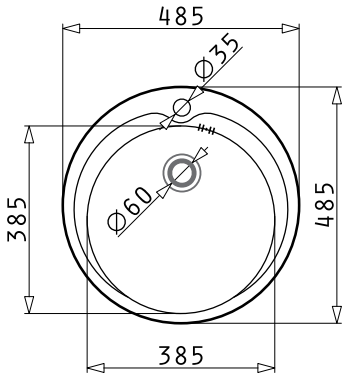

IRIS SMALL UNDERMOUNT SINK

PYRAMIS

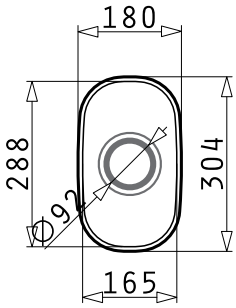

ROUND BOWL ROUND DRAINER SINK

PYRAMIS

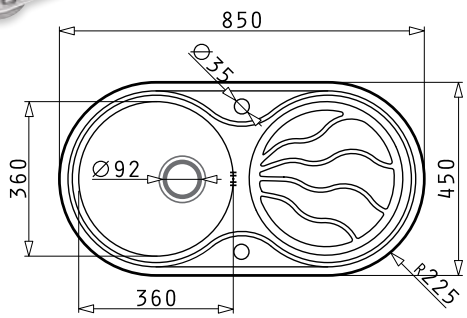

IRIS MEDIUM UNDERMOUNT SINK

PYRAMIS

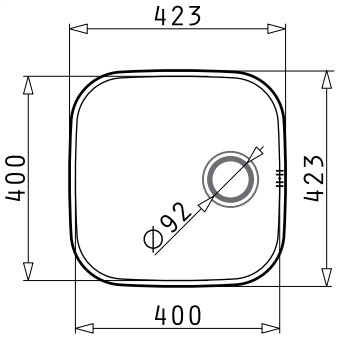

IRIS LARGE UNDERMOUNT SINK

PYRAMIS

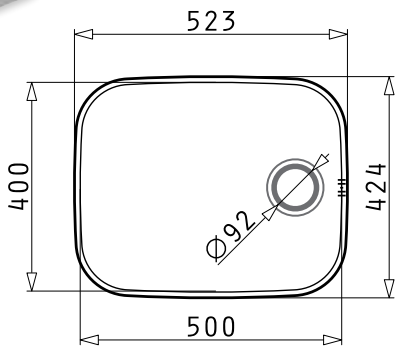

LYDIA MEDIUM UNDERMOUNT SINK

PYRAMIS

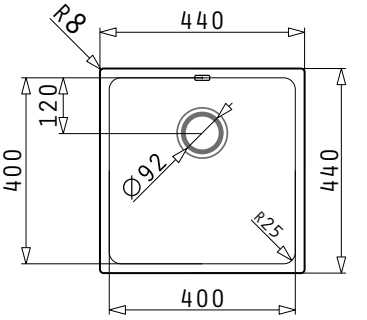

DIONE 1.5 BOWL UNDERMOUNT SINK

PYRAMIS

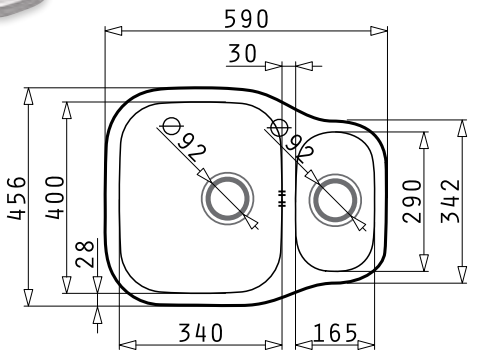

LYDIA SMALL UNDERMOUNT SINK

PYRAMIS

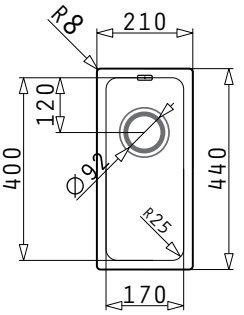

MVI HAZEL
1 Mygan Industrial Park
Jamestown Road, Finglas
Dublin 11, Ireland

P +353 1 864 3480
F +353 1 864 3508
E sales@mvi.com
W www.mvi.com